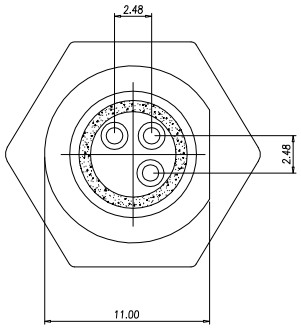

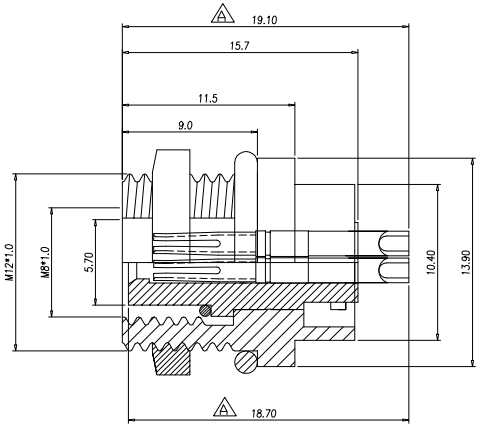

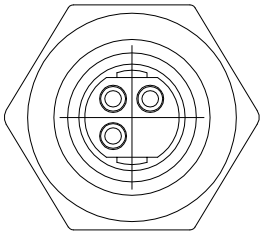

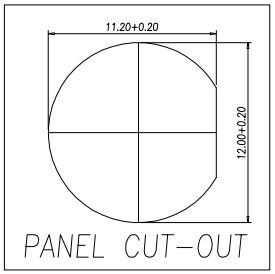

1. MATERIAL
   INSULATION: THERMOPLASTIC UL94V-0
   COLOR: BLACK.
   CONTACT: BRASS
   SHELL: BRASS
   NUT:BRASS
   O-Ring: NBR(BLACK)
2. PLATING
   CONTACT: GOLD 10u" on contact
   Goldflash on solder Area
   Shell:NICKEL 60u"
   NUT:NICKEL 60u"

Date	20.05.2011	Rev.	Revision Detail	Rev.Dt.	Rev.by	Part No		
Designed by	İLKNUR	-				TT-8F3P-B-E-FL-12x1SSG10		
Checked by	A.BAHÇIVAN							
TTAF®						Drawing Nr.	Scale	Sheet No
						-	NONE	1/1

A4

Form No: FR-01/004 İYT: 10/2003 Rev:05 22/03/2010