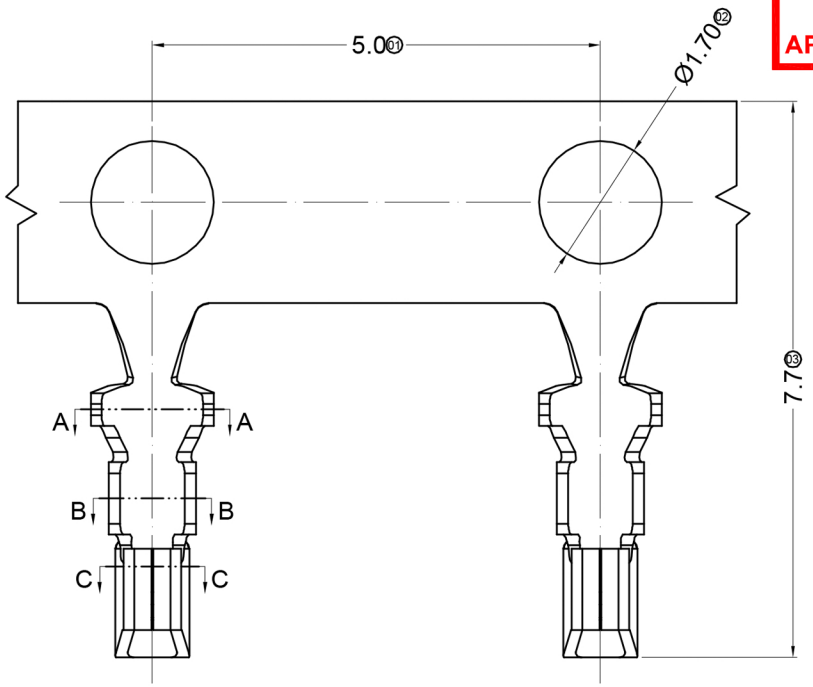

TTAF APPROVAL

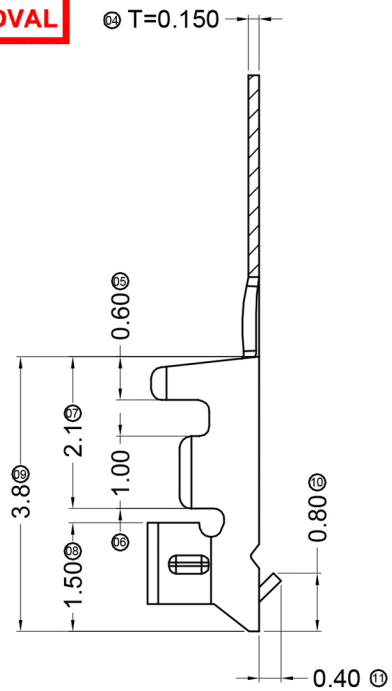

■ Specifications :

- Voltage rating: 50V AC / DC
- Current rating: 1A AC / DC
- Withstanding voltage: 500V AC/minute
- Temperature range: -25°C~+85°C
- Insulation resistance:≥500MΩ
- Contact resistance: ≤20mΩ
- After environmental testing：≤30mΩ

150G1-TP-P SN X - X
① ② ③ ④ ⑤ ⑥ ⑦

① Series Number
② Category: T-Terminal
③ Shape：Blank-ordinary
④ Material：P-Phosphor bronze
⑤ Plating style: SN-Bright tin plating
⑥ Plating method：Blank-Stamping before plating
⑦ Mold No./Mark/Special No.

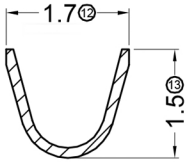

SECTION: A-A
SCALE: 1:1

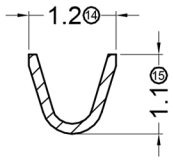

SECTION: B-B
SCALE: 1:1

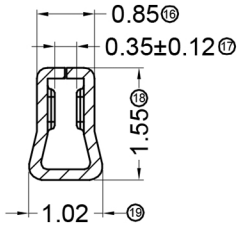

SECTION: C-C
SCALE: 1:1

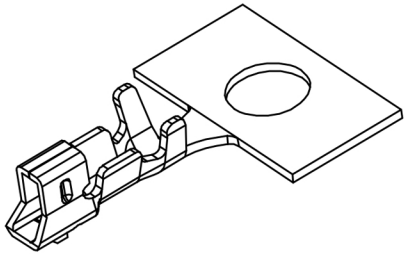

150G1-TP	Phosphor Bronze	AWG#26-32	1.20mm(Max)	Stamping Before Plating:30u" MIN. Ni; 70u" MIN. Sn	1502H
PART N0	Material	Wire Range	Insulation O.D.	Finish	Used In ADZL Housing

Date	30.11.2016		Rev.	Revision Detail	Rev.Dt.	Rev.by	Part No
Designed by	Yeşim AKSOY		-				150G1-TP
Checked by	Fatih BOLACA						
TTAF							Drawing Nr. / Scale: NONE / Sheet No: 1/1

A4